DI, DM Series Dip Switches

SPECIFICATION:

1. Non-switching rating : 100mA 50V DC.
2. Switching rating : 25mA 24V DC.
3. Contact resistance : 50mΩ Max.(initial)
4. Insulation resistance : 100MΩ Min.at 500V DC.
5. Withstand voltage : 500V AC for 1 minute.
6. Electrical life : 2,000 Cycles.
7. Operating force : 600g Max.
8. Stroke : 0.9mm.
9. Base : Nylon UL-94V-0.
10. Terminal : Brass with gold plated.

HOW TO ORDER

MODEL NO.	+	ACTUATOR (HANDLE)	−	POSITION	+	TERMINAL SHAPE	+	FINISH	+	SEAL
DI : Insertable type DM : Surface mounting type		□: Raised type R : Recessed type		01 : 1 position (for DI only) 02 : 2 positions ~ 12 : 12 positions		□: Regular S : Splay terminal H : Straight terminal (For DI Series Only)		G : Gold plated		□: Regular T : Top tape sealed (For recessed type)

DI, DIR SERIES

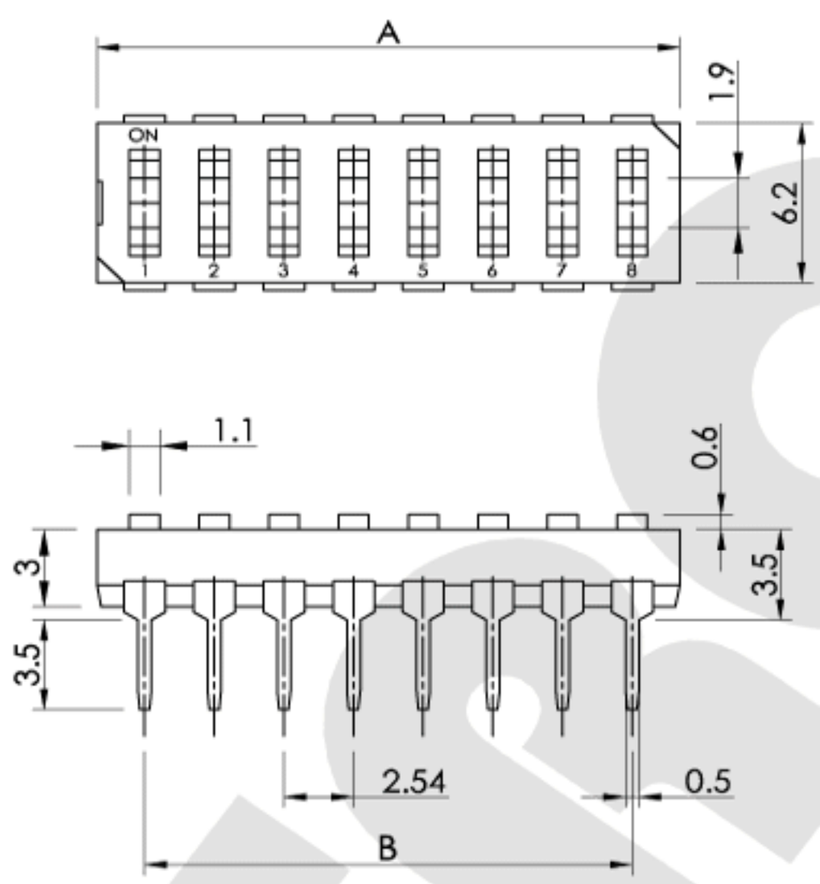

P.C.B. LAYOUT

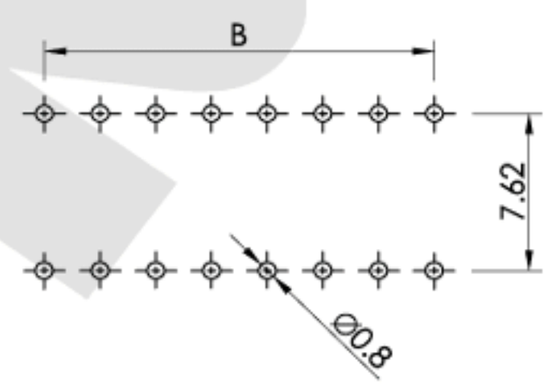

TERMINAL SHAPE

Positions NO		1	2	3	4	5	6	7	8	9	10	12
A	mm	3.48	6.02	8.56	11.10	13.64	16.18	18.72	21.26	23.80	26.34	31.42
B	mm	—	2.54	5.08	7.62	10.16	12.70	15.24	17.78	20.32	22.86	27.94

DM, DMR SERIES

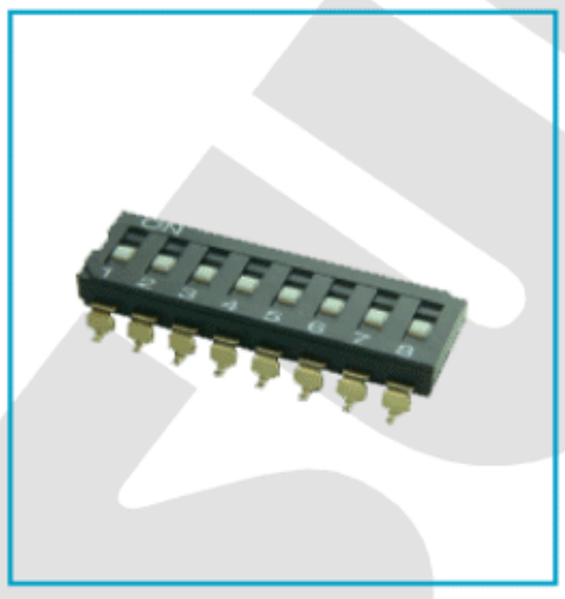

800 PCS/REEL

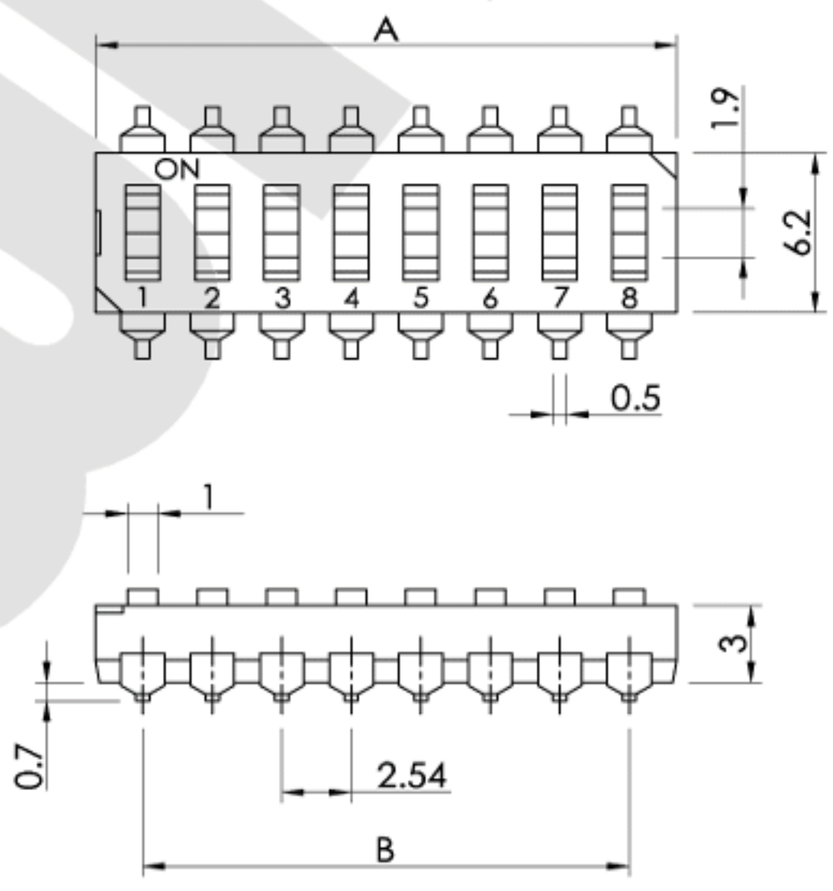

P.C.B. LAYOUT

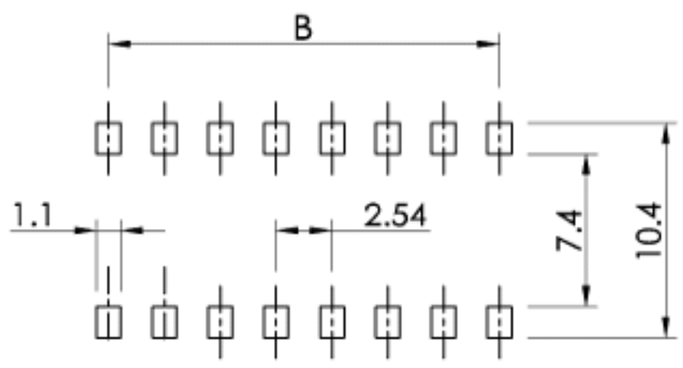

DM SERIES

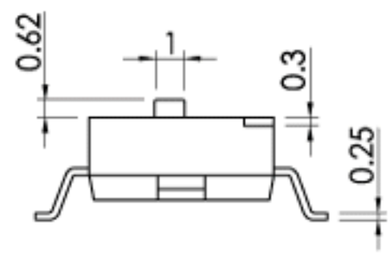

DMR SERIES

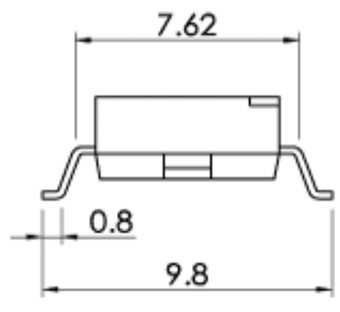

Positions NO		2	3	4	5	6	7	8	9	10	12
A	mm	6.02	8.56	11.10	13.64	16.18	18.72	21.26	23.80	26.34	31.42
B	mm	2.54	5.08	7.62	10.16	12.70	15.24	17.78	20.32	22.86	27.94